PUBLIC EXAMINATION YEAR WISE (MARCH 2019 – JUNE 2023)
(TWO MARKS NUMERICAL PROBLEMS QUESTION WITH SOLUTION)

1. The de-Broglie wavelength of a neutron of kinetic energy K is λ. When its kinetic energy. is 4 K, what is the de-Broglie wavelength of the neutron? **(MARCH – 2019)**

de Broglie wavelength $\lambda = \frac{h}{\sqrt{2mE}}$ Here E = K

de Broglie wavelength $\lambda = \frac{h}{\sqrt{2mK}}$ E = 4K

de Broglie wavelength $\lambda' = \frac{h}{\sqrt{2m4k}}$; $\lambda' = \frac{h}{2\sqrt{2mk}}$ (or) $\lambda' = \frac{h}{2}$

2. The number of turns in the primary of an ideal transformer is 400 and that in the secondary 2000. If the output power from the secondary at 1000 V is kW then calculate the voltage and current in the primary coil. **(MARCH – 2019)**

$\frac{E_S}{E_P} = \frac{N_S}{N_P}$; $E_P = 1000 \times \frac{400}{2000}$; $E_P = 200$ V

Ideal Transformer = $E_P I_P = E_S I_S$

$I_P = \frac{10000}{200}$; $I_P = 50$A

3. An ideal transformer has 460 and 40,000 turns in the primary and secondary coils respectively. Find the voltage developed per turn of the secondary coil if the transformer is connected to a 230 V AC main. **(MARCH – 2020)**

i) Secondary voltage, $V_S = \frac{V_P N_S}{N_P} = \frac{230 \times 40000}{460}$; $V_S = 20000$V

ii) Secondary voltage per turn, $\frac{V_S}{N_S} = \frac{20000}{40000}$; = 0.5 V

4. Two materials X and Y are magnetized whose intensity of magnetization are 500 Am^{-1} and 2000 Am^{-1} respectively. The magnetizing field is 1000 Am^{-1}. What is the ratio between the susceptibilities of the two material? **(MARCH – 2020)**

The susceptibility of material X is $\chi_m X = \frac{|\vec{M}|}{|\vec{H}|} = \frac{500}{1000} = 0.5$

The susceptibility of material Y is $\chi_m Y = \frac{|\vec{M}|}{|\vec{H}|} = \frac{2000}{1000} = 2$

Since, susceptibility of material Y is greater than that of material X, material Y can be easily magnetized than X. 0.5 : 4 or 1 : 4

5. An electron in Bohr's hydrogen atom has an energy of –3.4 eV. What is the angular momentum of the electron? **(MARCH – 2020)**

Total Energy $E_n = \frac{-13.6}{-3.4} = 4$: $n^2 = 4$: $n = 2$

Angular momentum $L = \frac{nh}{2\pi}$; $= \frac{h}{\pi}$;$= \frac{6.63x10^{-34}}{3.14}$

$L = 2.11 \times 10^{-34}$ kgm^2s^{-1}

6. Calculate the cut-off wavelength and cut-off frequency of X-rays from an X-ray tube of accelerating potential 20,000 V. **(SEPTEMBER – 2020, MAY – 2022)**

The cut-off wavelength of the characteristic x-rays is $\lambda_0 = \frac{12400}{V}$ Å

$= \frac{12400}{20000}$ Å ; = 0.62 Å

The corresponding frequency is $v_0 = \frac{c}{\lambda_0}; = \frac{3 \times 10^8}{0.62 \times 10^{-10}}$

$v_0 = 4.84 \times 10^{18}$ Hz

7. Potential in a given region is given as a function of distance x, $V=5(x^2+x)$ Volt. Find the electric field when x = 1 cm. **(SEPTEMBER – 2020)**

$E = \frac{dv}{dx}$; $= \frac{d}{dx}(5x^2 + 5x)$;

$= 10x + 5$; $x = 1$; $E = 10 + 5 = 15$ Vcm^{-1}

8. If an electric field of magnitude 570 NC^{-1}. Is applied in the copper wire, find the experienced by the electron. **(SEPTEMBER – 2020)**

$a = \frac{Ee}{m}$; $= \frac{570 \times 1.6 \times 10^{-19}}{9.1 \times 10^{-31}}$; $a = 100.29 \times 10^{12}$ ms^{-2}

9. Compute the speed of electromagnetic wave in a medium if the amplitudes of electric and magnetic fields in it are 3×10^4 NC^{-1} and 2×10^{-4} T respectively. **(SEPTEMBER – 2020)**

Speed of the electromagnetic wave in a medium is $v = \frac{E}{B}$

$v = \frac{3 \times 10^4}{2 \times 10^{-4}}$; $v = 1.5 \times 10^8$ ms^{-1}

10. Find the Polarizing angle for glass of refractive index 1.5. **(SEPTEMBER – 2021, JUNE – 2023)**

Brewster's law, $\tan i_P = n$

For glass, $\tan i_P = 1.5$; $i_P = \tan^{-1} 1.5$; $i_P = 56.3^0$

11. Dielectric strength of air is 4×10^6 Vm^{-1}. Suppose the radius of a hollow sphere in the Van de Graaff generator is R = 0.4 m, calculate the maximum potential difference created by this Van de Graaff generator. **(SEPTEMBER – 2021)**

The electric field on the surface of the sphere (by Gauss law) is given by

$E = \frac{1}{4\pi\varepsilon_0}\frac{Q}{R^2}$

The potential on the surface of the hollow metallic sphere is given by

$V = \frac{1}{4\pi\varepsilon_0}\frac{Q}{R} = ER$; With $V_{max} = E_{max} R$

Here $E_{max} = 4 \times 10^6 \frac{V}{m}$. So, the maximum potential difference created is given by

$V_{max} = 4 \times 10^6 \times 0.4$; $= 1.6 \times 10^6$ V (or) 1.6 million volt

12. Calculate the momentum of an electron with kinetic energy 2 eV. **(SEPTEMBER – 2021, JUNE – 2023)**

Momentum of the electron is

$p = \sqrt{2mK} = \sqrt{2 \times 9.1 \times 10^{-31} \times 2 \times 1.6 \times 10^{-19}}$; $\sqrt{58.24 \times 10^{-50}}$

$p = 7.63 \times 10^{-25}$ kg ms^{-1}

13. A copper wire of cross-sectional area 0.5 mm^2 carries a current of 0.2 A. If the free electron density of copper is 8.4×10^{28} m^{-3} then compute the drift velocity of free electrons. **(SEPTEMBER – 2021)**

The relation between drift velocity of electrons and current in a wire of c ross-sectional area A is $V_d = \frac{I}{neA}$; $= \frac{0.2}{8.4 \times 10^{28} \times 1.6 \times 10^{-19} \times 0.5 \times 10^{-6}}$ ‘

$= \frac{2 \times 10^{-3}}{6.72}$ $V_d = 0.03 \times 10^{-3}$ ms^{-1}

14. Calculate the radius of $^{197}_{79}Au$ nucleus. **(MAY – 2022)**

$(R = R_0 A^{\frac{1}{3}})$, $R = 1.2 \times 10^{-15} \times (197)^{\frac{1}{3}}$

$= 6.97 \times 10^{-15}$m (or) R = 6.97 F

15. The angle of minimum deviation for the equilateral prism is 40^0. Find the refractive index of the material of the prism. **(MAY – 2022)**

Equation for refractive index is, $n = \frac{\sin\left(\frac{A+D}{2}\right)}{\sin\left(\frac{A}{2}\right)}$

Substituting the values, $n = \frac{\sin\left(\frac{60^0+40^0}{2}\right)}{\sin\left(\frac{60^0}{2}\right)}$; $= \frac{\sin(50^0)}{\sin(30^0)}$; $= \frac{0.766}{0.5}$; = 1.532;

The refractive index of the material of the prism is, n = 1.532 (No Unit)

16. Pure water has refractive index 1.33. What is the speed of light through it? **(JULY – 2022)**

n = $\frac{c}{v}$; $v = \frac{c}{n}$; $v = \frac{3 \text{ x } 10^8}{1.33}$; = 2.25 x 10^8 ms^{-1}

Light travels with a speed of 2.25 × 10^8 ms^{-1} through pure water.

17. Calculate the equivalent resistance for the circuit which is connected to 12 V battery and find the potential difference across 2Ω and 4Ω resistors in the circuit. **(JULY – 2022)**

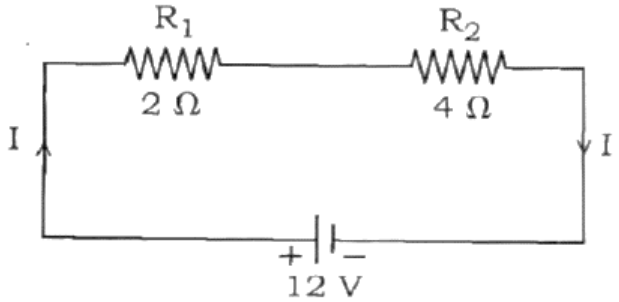

Since the resistors are connected in series, the effective resistance in the circuit = 2 Ω + 4 Ω = 6 Ω

The Current I in the circuit $= \frac{V}{R_{eq}} = \frac{12}{6}$ = 2 A

Voltage across 4Ω resistor

$V_1 = IR_1$ = 2A x 2 Ω = 4 V

Voltage across 6 Ω resistors

$V_2 = IR_1$ = 2A x 4 Ω = 8 V

18. The relative magnetic permeability of the medium is 2.5 and the relative electrical permittivity of the medium is 2.25. Compute the refractive index of the medium. **(JULY – 2022, MARCH 2023)**

Refractive index of the medium, n = $\sqrt{\epsilon_r \mu_r}$; = $\sqrt{2.25 \text{ x } 2.5}$;

= $\sqrt{5.625}$; n =2.37 No Unit

19. The ratio of intensities of two waves in an interference pattern is 36 : 1. What is the ratio of the amplitudes of the two interfering waves? **(MARCH – 2023)**

$I \propto a^2$ **(OR)** $I_1 \propto a_1^2$ **(OR)** $I_2 \propto a_2^2$

$\frac{I_1}{I_2} = \frac{a_1^2}{a_2^2}$ **(OR)** $\frac{a_1}{a_2} = \sqrt{\frac{I_1}{I_2}} = \sqrt{\frac{36}{1}}$; $\frac{a_1}{a_2} = \frac{6}{1}$

(OR)

$I \propto a^2$ **(OR)** $I_{max} \propto (a_1 + a_2)^2$ and $I_{min} \propto (a_1 - a_2)^2$

$\frac{I_{max}}{I_{min}} = \frac{(a_1+a_2)^2}{(a_1-a_2)^2}$ **(OR)** $\frac{a_1+a_2}{a_1-a_2} = \sqrt{\frac{I_{max}}{I_{min}}} = \sqrt{\frac{36}{1}}$

$\frac{(a_1+a_2)}{(a_1-a_2)} = \frac{6}{1}$ **(OR)** $\frac{a_1}{a_2} = \frac{7}{5}$

20. If the resistance of coil is 3Ω at 20^0 C and α = 0.004/^{0}C, then , determine its resistance at 100^0C. **(MARCH – 2023)**

$R_T = R_0(1 + \alpha(T-T_0))$
$R_{100} = 3(1 + 0.004 \times 80)$; $R_{100} = 3(1 + 0.32)$
$R_{100} = 3(1.32)$; $R_{100} = 3.96\ \Omega$

21. Determine the number of electrons flowing per second through a conductor, when a current of 32 A flows through it? **(JUNE – 2023)**

I = 32 A , t = 1 s Charge of an electron, e = 1.6×10^{-19} C The number of electrons flowing per second, n =?

$$I = \frac{q}{t} = \frac{ne}{t} \text{ ; } n = \frac{It}{e} \text{ ; } n = \frac{32 \times 1}{1.6 \times 10^{-19}\ C}$$

n= $20 \times 10^{19} = 2 \times 10^{20}$ electrons

22. The radius of the 5th orbit of hydrogen atom is 13.25 Å . Calculate the de Broglie wavelength of the electron orbiting in the 5th orbit. **(JUNE – 2023)**

$2\pi r = n\lambda$; 2 x3.14 x 13.25 Å = 5 x λ ; ∴ λ = 16.64 Å

(or) $\lambda = \frac{2\pi r}{n}$; = $\frac{2 \times 3.14 \times 13.24 \times 10^{-10}}{5}$; = 2 X 3.14 X 2.68 X 10^{-10}

λ = 16.64 X 10^{-10} m ; λ = 16.64 Å

PUBLIC EXAMINATION YEAR WISE (MARCH 2019 – JUNE 2023)
(THREE MARKS NUMERICAL PROBLEMS QUESTION WITH SOLUTION)

1. 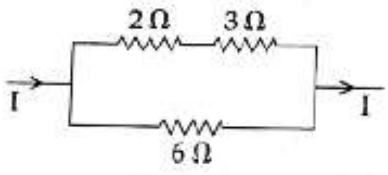

The heat developed across 6 Ω resistor per second is 50 J. Calculate the heat developed per second across 2 Ω resistor in the given electric circuit. **(MARCH – 2019)**

$H = \frac{V^2 t}{R}$; $= \frac{V^2 x\, 1}{6}$; $= V^2 = 6H$; $V^2 = 6 \times 50$; $V^2 = 300$

$I_1 = \frac{V}{(R_1+R_2)}$; $= \frac{\sqrt{300}}{5}$

$H = I^2Rt$; $= \frac{300}{25} \times 2 \times 1$; $H = 24J$

2. Half lives of two radioactive elements are 12 hrs and 16 hrs respectively. If at any instant, the ratio of the amounts of radioactive substance is 2 : 1 , then after 2 days, What will be the ratio of the un-decayed portions? **(MARCH – 2019)**

$N_1 = (N_0)_1 (½)^{n1}$ --------1

$N_2 = (N_0)_2 (½)^{n2}$ --------2

$n_1 = \frac{2 \times 24}{12} = 4$; $n_2 = \frac{2 \times 24}{16} = 3$ --------3

$n_1 = \frac{2 \times 24}{12} = 4$;

$\frac{(N_0)1}{(N_0)2} = \frac{2}{1}$; $\frac{N_1}{N_2} = \frac{2}{1}\frac{\left(\frac{1}{2}\right)4}{\left(\frac{1}{2}\right)3}$; $\frac{N_1}{N_2} = 2x\ \frac{1}{2}$; $\frac{N_1}{N_2} = 1$ $N_1 : N_2 = 1 : 1$

3. In Young's double slit experiment two coherent sources of intensity ratio of 64:1, produce interference fringes. Calculate the ratio of maximum and minimum intensities. **(MARCH – 2019)**

$\frac{I_1}{I_2} = \frac{{a_1}^2}{{a_2}^2} = \frac{64}{1} = \frac{a_1}{a_2} = \frac{8}{1}$ $a_1 = 8a_2$

$\frac{I_{max}}{I_{min}} = \frac{(a_1+a_2)^2}{(a_1-a_2)^2}$; $= \frac{(8a_2+a_2)^2}{(8a_2-a_2)^2}$; $= \frac{(9a_2)^2}{(7a_2)^2}$; $= \frac{81}{49}$

$I_{max} : I_{min} : 81 : 49$

4. Two light sources of equal amplitudes interfere with each other. Calculate the ratio of maximum and minimum intensities. **(MARCH – 2019)**

$I \propto 4a^2\cos^2\left(\frac{\phi}{2}\right)$ (or) $I = 4\, I_0 \cos^2\left(\frac{\phi}{2}\right)$

Resultant Intensity for maximum : $\phi = 0$, $\cos\theta = 1$; $I_{max}\ \alpha\ 4a^2$

Resultant Intensity for minimum : $\phi = \pi$, $\cos\frac{\pi}{2} = 0$; $I_{min.}\ \alpha\ 0$

$I_{max} = I_{min} = 4a^2 : 0$

5. The resistance of a nichrome wire at 0^0 C is 10Ω. If its temperature coefficient of resistance is $0.004/^0C$, find its resistance at boiling point of water. Comment on the result. **(MARCH – 2020)**

Temperature of boiling point of water,

$R_T = R_0\,(1 + \alpha T)$; $= 10[1+(0.004 \times 100^0]$

$R_T = 10(1+0.4) = 10 \times 1.4$; $R_T = 14\ \Omega$

As the temperature increases the resistance of the wire also increases.

6. In the circuit shown in the figure, the input voltage V_i is 20 V, V_{BE} = 0 V and V_{CE} = 0 V. What are the values of I_B, I_C, β? **(MARCH – 2020)**

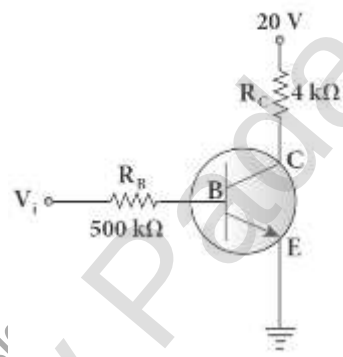

$I_B = \frac{V_i}{R_B} = \frac{20\ V}{500\ k\Omega}$;= 40μA $\quad [\therefore\ V_{BE} = 0V]$

$I_C = \frac{V_{CC}}{R_C} = \frac{20\ V}{4\ k\Omega}$; = 5mA $\quad [\therefore\ V_{CE} = 0V]$

$\beta = \frac{I_C}{I_B} = \frac{5\ mA}{40\mu A}$; β = 125

7. Half lives of two radioactive elements A and B are 20 minutes and 40 minutes respectively. Initially the samples have equal number of nuclei. Calculate the ratio of decayed number of A and B nuclei after 80 minutes. **(SEPTEMBER – 2020)**

Decayed part of A atom : $\frac{15}{16}$ or 93.75 %

Decayed part of B atom : $\frac{3}{4}$ or 75 %

Ratio between A and B atom $\frac{N_A}{N_B} = \frac{5}{4}$ or $N_A = N_B = 5 : 4$

$N_A = N_B = 1.25\%$ (or)

80 minutes = 4 half-lives of A = 2 half live of B

Let the initial number of nuclei in each sample be N.

N_A after 80 minutes = $\frac{N}{2^4}$

Number of A nuclides decayed = $\frac{15}{16}$ N

N_B after 80 minutes = $\frac{N}{2^4}$

Number of B nuclides decayed = $\frac{3}{4}$ N

Required ratio = $\frac{15}{16} \times \frac{4}{3} = \frac{5}{4}$; $N_A : N_B = 5 : 4$

8. An 500 μH, $\frac{80}{\pi^2}$ pF capacitor and a 628 Ω resistor are connected to form a series RLC circuit. Calculate the resonant frequency and Q-factor of this circuit at resonance.

(SEPTEMBER – 2020)

$$f = \frac{1}{2\pi\sqrt{LC}} \; ; = \frac{1}{2\pi\sqrt{500 \times 10^{-6} \times \frac{80}{\pi L} \times 10^{-12}}}$$

$$= \frac{1}{2\sqrt{40000 \times 10^{-10}}} \; ; = \frac{10000 \times 10^3}{4} \; ; f = 2500\text{kHz}$$

$$\text{Q factor} = \frac{\omega_r L}{R}; \frac{2 \times 3.14 \times 2500 \times 10^3 \times 500 \times 10^{-6}}{628}$$

Q factor = 12.5

9. Write the output (Y) Boolean expression for the following circuit with inputs A, B and C.

(SEPTEMBER – 2020)

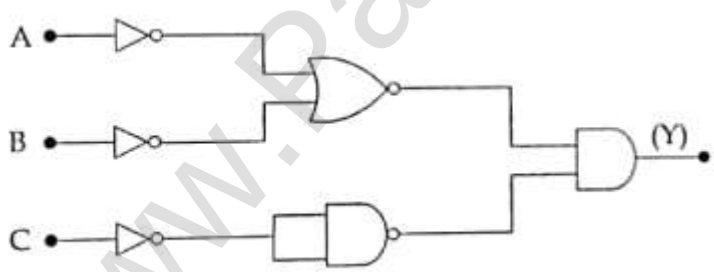

Output of A and B = $\overline{\bar{A} + \bar{B}}$ or $\overline{\overline{AB}}$ or AB

Output of C = C

Output of circuit Y = ABC

10. The repulsive force between two magnetic poles in air is 9×10^{-3} N. If the two poles are equal in strength and are separated by a distance of 10 cm, calculate the pole strength of each pole. **(SEPTEMBER – 2021)**

The force between two poles are given by $\vec{F} = k\frac{q_{mA}q_{mB}}{r^2}\hat{r}$

The magnitude of the force is $F = k\frac{q_{mA}q_{mB}}{r^2}$

Given : $F = 9 \times 10^{-3}$N, $r = 10$ cm $= 10 \times 10^{-2}$ m

Therefore, $9 \times 10^{-3} = 10^{-7} \times \frac{q_m^2}{(10 \times 10^{-2})^2} \Longrightarrow q_m^2 = 900$; $q_m = 30$ NT^{-1}

11. $_{92}U^{235}$ nucleus emits 2α particles, 3β particles and 2γ particles. What is the resulting atomic number and mass number? **(SEPTEMBER – 2021)**

The α- decay process symbolically written as

$^{A}_{Z}X \rightarrow {}^{A-4}_{Z-2}Y + {}^{4}_{2}He$.

(e.g.) $^{235}_{92}U \rightarrow 2\alpha \; {}^{235-8}_{92-4}X + 2{}^{4}_{2}He$; $^{227}_{88}X + 2{}^{4}_{2}He$

In β− decay,

$^{A}_{Z}X \rightarrow {}_{Z+1}^{A}Y + {}_{-1}^{0}e + \bar{\nu}$. (e.g.) $_{88+3}^{227}Y + 3\,{}_{-1}^{0}e$; $^{227}_{91}Y + 3\,{}_{-1}^{0}e$

During gamma decay there is **no change in atomic number and mass number**. $^{A}_{Z}X^{*} \rightarrow {}^{A}_{Z}X$ +gamma rays (γ)

12. Find the:
    (i) Angular momentum
    (ii) Velocity of the electron revolving in the 5th orbit of hydrogen atom.
    ($h = 6.6 \times 10^{-34}$ Js; $m = 9.1 \times 10^{-31}$ kg) **(MAY – 2022)**

(i) Angular momentum is given by $= n\hbar = \frac{nh}{2\pi}$; $= \frac{5 \times 6.6 \times 10^{-34}}{2 \times 3.14}$

$= 5.25 \times 10^{-34}$ kgm^{2}s^{-1}

(ii) Velocity is given by velocity, $= \frac{l}{mr}$; $= \frac{(5.25 \times 10^{-34}\ \cancel{kg}m^{\cancel{2}}s^{-1})}{(9.1 \times 10^{-31}\ \cancel{kg})\ (13.25 \times 10^{-10}\ \cancel{m})}$

$v =$ **4.4 x 10^5 ms^{-1}**

13. Find the impedance of a series RLC circuit, if the inductive reactance, capacitive reactance and resistance are 184 Ω, 144 Ω, and 30 Ω respectively. Also calculate the phase angle between voltage and current. **(MAY – 2022)**

(i) The impedance is Impedance, $Z = \sqrt{R^{2+(X_L - X_C)^2}}$

$= \sqrt{30^{2+}(184 - 144)^2}$; $= \sqrt{900 + 1600}$

Impedance, Z = 50 Ω

(ii) Phase angle is tan ϕ = $\frac{X_L - X_C}{R}$; $\frac{184-144}{30}$; = 1.33 ; ϕ = 53.1^0

14. Light travels from air into a glass slab of thickness 50 cm and refractive index 1.5.
(a) What is the speed of light in the glass slab?
(b) What is the time taken by the light to travel through the glass slab? **(JULY – 2022)**

Speed of light in glass is, $v = \frac{c}{n}$; $= \frac{3 \times 10^8}{1.5}$; = 2 x 10^8 ms^{-1}.
Time taken by light to travel through glass slab is,

$t = \frac{d}{v}$; $= \frac{0.5}{2 \times 10^8}$ = 2.5 x 10^{-9} s

Optical path, $d' = nd = 1.5 \times 0.5$; = 0.75m ; =75 cm

Light would have travelled 25 cm more (75 cm – 50 cm) in vacuum by the same time had there not been a glass slab.

15. Calculate the number of nuclei of carbon-14 undecayed after 22,920 years if the initial number of carbon-14 atoms is 10,000. The half –life of carbon-14 is 5730 years. **(JULY – 2022)**

To get the time interval in terms of half-life, n = $\frac{t}{T_{1/2}} = \frac{22920 \text{ yr}}{5730 \text{ yr}}$ = 4

The number of nuclei remaining un-decayed after 22,920 years,

N = $\left(\frac{1}{2}\right)^n N_o$; = $\left(\frac{1}{2}\right)^4$ x 10000 ; N = 625

16. An electron moving perpendicular to a uniform magnetic field 0.500 T undergoes circular motion of radius 2.50 mm. What is the speed of electron? **(JULY – 2022)**

Velocity of the electron, $v = |q|\frac{rB}{m}$

$v = 1.60 \times 10^{-19} \times \frac{2.50 \times 10^{-3} \times 0.500}{9.11 \times 10^{-31}}$;

$v = 2.195 \times 10^8$ ms^{-1}

17. The given circuit has two ideal diodes connected as shown in figure below. Calculate the current flowing through the resistance R_1 **(MARCH – 2023)**

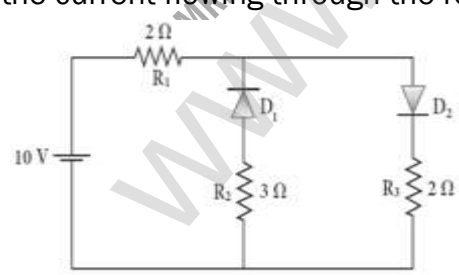

Diode D_1 is reverse biased so, it will block the current and Diode D_2 is forward biased, so it will pass the current.

R_{net} = 2 + 2 = 4Ω

Current in the circuit is I = $\frac{V}{R}$; $= \frac{10}{2+2} = \frac{10}{4}$; I = 2.5A

18. Calculate the amount of energy released in joules when 1 kg of $^{235}_{92}U$ undergoes fission reaction. **(MARCH – 2023)**

235 g of $^{235}_{92}U$ has 6.02 x 10^{23} atoms. In one gram of $^{235}_{92}U$, the number of atoms is equal to $\frac{6.02x10^{23}}{235}$ = 2.56 x 10^{21} ;

So the number of atoms present in 1 kg of $^{235}_{92}U$ **= 2.56 x 10^{21} x 1000 = 2.56 x 10^{24}**

Each $^{235}_{92}U$ nucleus releases 200 Mev of energy during the fission. The total energy released by 1 kg of $^{235}_{92}U$ is

Q= 2.56 x 10^{24} x 200 Mev = 5.12 x 10^{26} MeV

In terms of joules, **5.12 x 10^{26} x 1.6 x 10^{-13} J = 8.192 x 10^{13} J**

19. Find the ratio of the intensities of light with wavelength 500 nm and 300 nm which undergo Rayleigh scattering. **(JUNE – 2023)**

λ_1 = 500 nm = 500 x 10^{-9} m ; λ_2 = 300 nm = 300 x 10^{-9} m ;

From Rayleigh's Scattering law, the intensity of scattered light $I \propto \frac{1}{\lambda^4}$

Hence, $I_1 \propto \frac{1}{\lambda_1^4}$ and $I_2 \propto \frac{1}{\lambda_2^4}$

From this , $\frac{I_1}{I_2} = \frac{\lambda_2^4}{\lambda_1^4}$; = $\left(\frac{300 \text{ x } 10^{-9}}{500 \text{ x } 10^{-9}}\right)^4$; = $\left(\frac{3}{5}\right)^4$; = $\frac{81}{625}$

$I_1 : I_2$ = 81 : 625

20. Calculate the electric flux through the rectangle of side 5 cm and 10 cm kept in the region of a uniform electric field 100 NC^{-1}. The angle θ is 60^0 . If θ becomes zero, what is the electric flux? **(JUNE – 2023)**

The electric flux $\Phi_E = \vec{E}.\vec{A}$ = EA cosθ = 100 x 5 x 10x10^{-4} x cos60^0

$\Rightarrow \Phi_E$ = 0.25 Nm^2C^{-1} .

For θ = 0^0, $\Phi_E = \vec{E}.\vec{A}$ = EA cosθ = 100 x 5 x 10x10^{-4}

= 0.5Nm^2C^{-1}

21. A coil of a tangent galvanometer of diameter 0.24 m has 100 turns. If the horizontal component of Earth's magnetic field is 25×10^{-6} T then, calculate the current which gives a deflection of 60^0. **(JUNE – 2023)**

The diameter of the coil is 0.24 m.
Therefore, radius of the coil is 0.12 m.
Number of turns is 100 turns.
Earth's magnetic field is 25 x 10^{-6} T
Deflection is $\theta = 60^0 \Longrightarrow \tan 60^0 = \sqrt{3}$ = 1.732

$I = \frac{2RB_H}{\mu_0 N}\tan\theta$; = $\frac{2 \text{ x } 0.12 \text{ x } 25 \text{ x } 10^{-6}}{4 \text{ x } 10^{-7} \text{x} 3.14 \text{ x} 100}$ x 1.732

= 0.82 x 10^{-1} A (or) $I =$ 0.082 A.

RAJENDRAN M, M.Sc., B.Ed., C.C.A.,
P.G. TEACHER IN PHYSICS, SRMHSS,
KAVERIYAMPOONDI, TIRUVANNAMALAI – 606603.